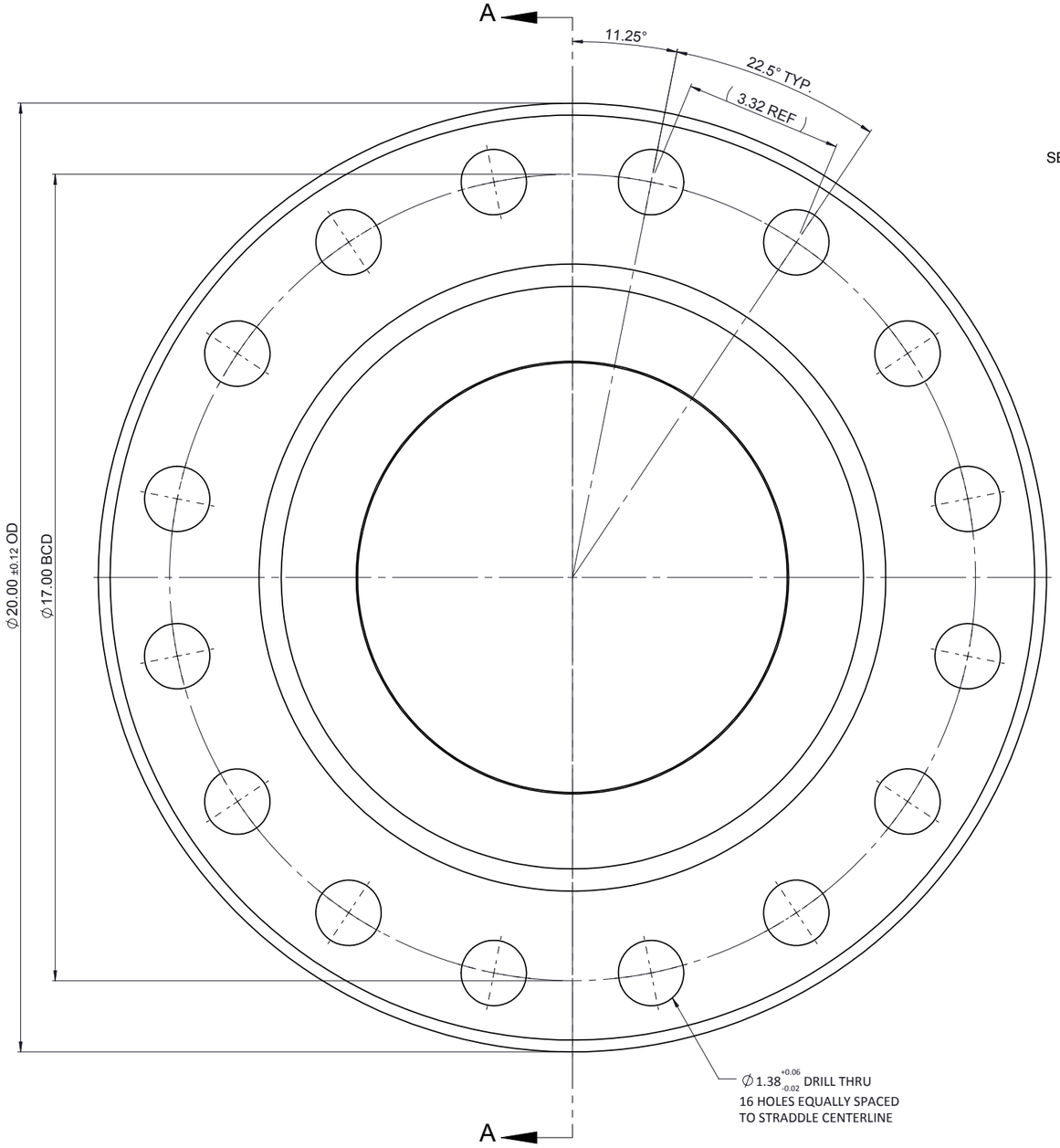

FRONT VIEW

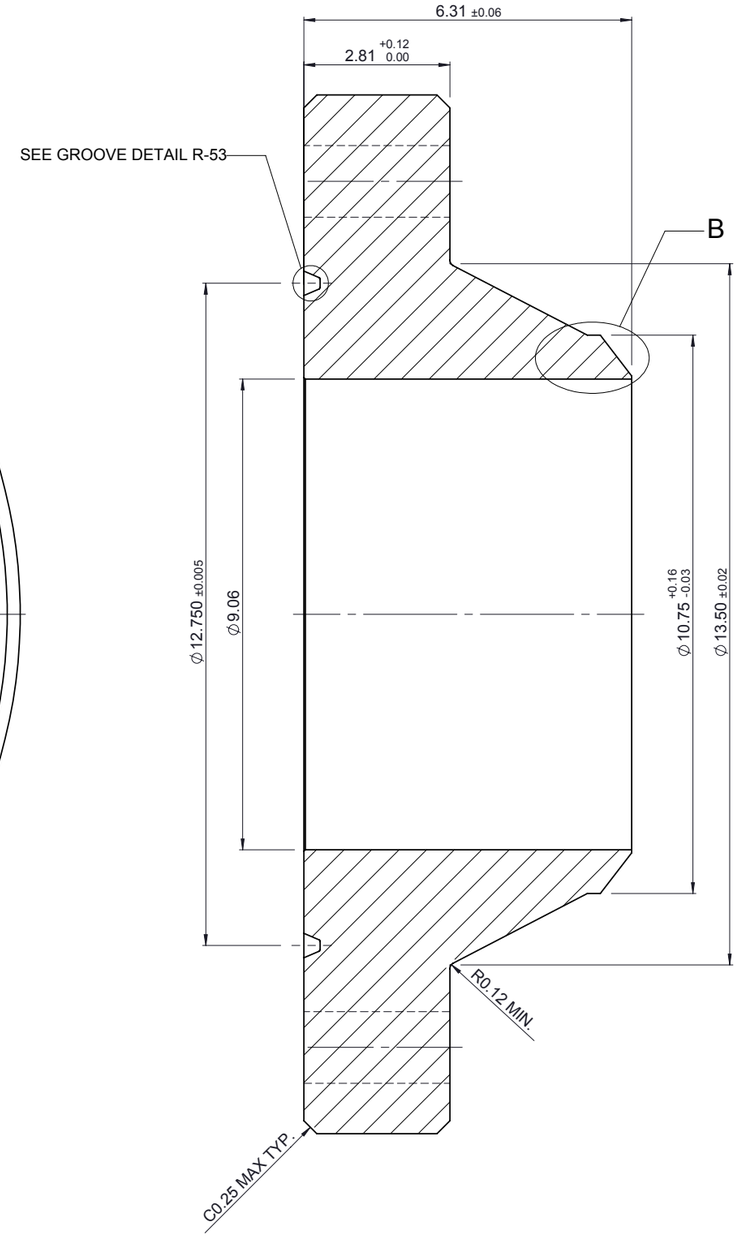

SEC. A-A

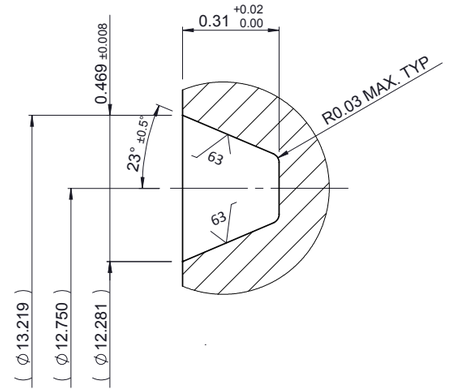

GROOVE DETAIL R-53
SCALE 2:1

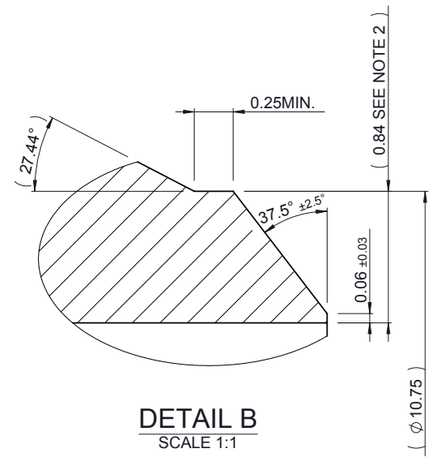

DETAIL B
SCALE 1:1

NOTES:

1. ALL DIMENSIONS ARE IN INCHES UNLESS OTHERWISE SPECIFIED.
2. HUB THICKNESS: 0.875" MAX.
3. BREAK SHARP EDGES.
4. BOLT HOLE CENTERLINE LOCATED WITHIN 0.03 IN. OF THEORETICAL BOLT CIRCLE AND EQUAL SPACING.
5. RING GROOVE SHALL BE CONCENTRIC WITH BORE WITHIN 0.010 TOTAL INDICATOR RUNOUT.

Flange Tech

TITLE: FLANGE, WN, RJ, 11 2M SCH80 R-53

DRAWN BY: ENGR. R	SCALE: 1:3	DWG. No.: DN-0001-2017	SHT. No.: 1/1

ISO A3