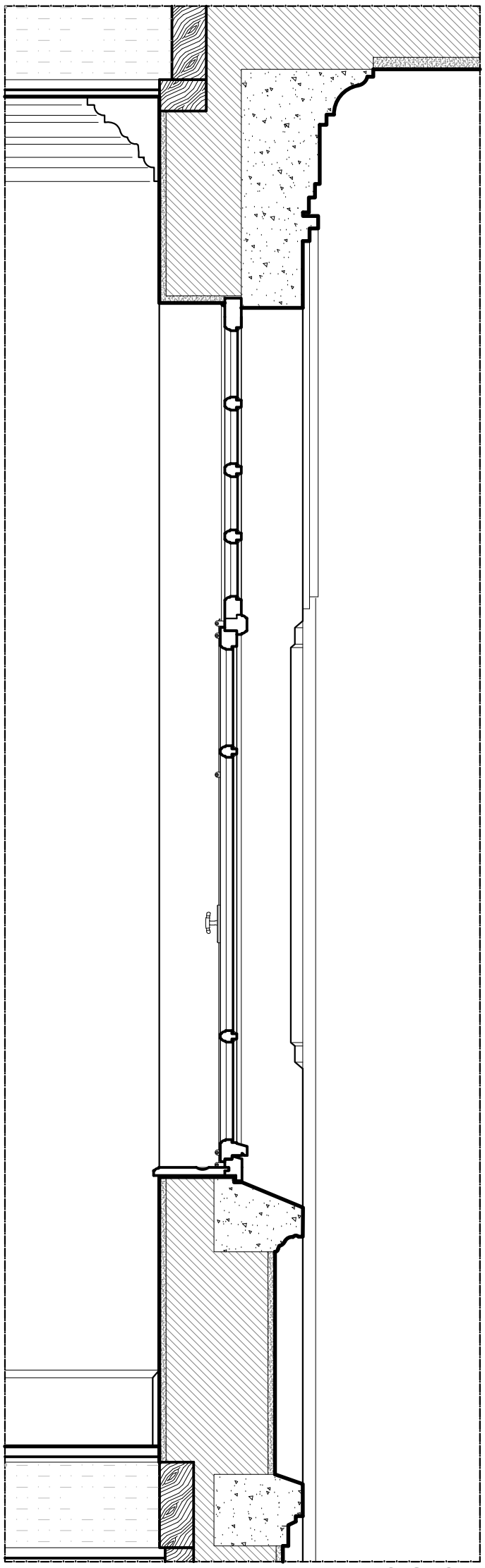

I - I SECTION

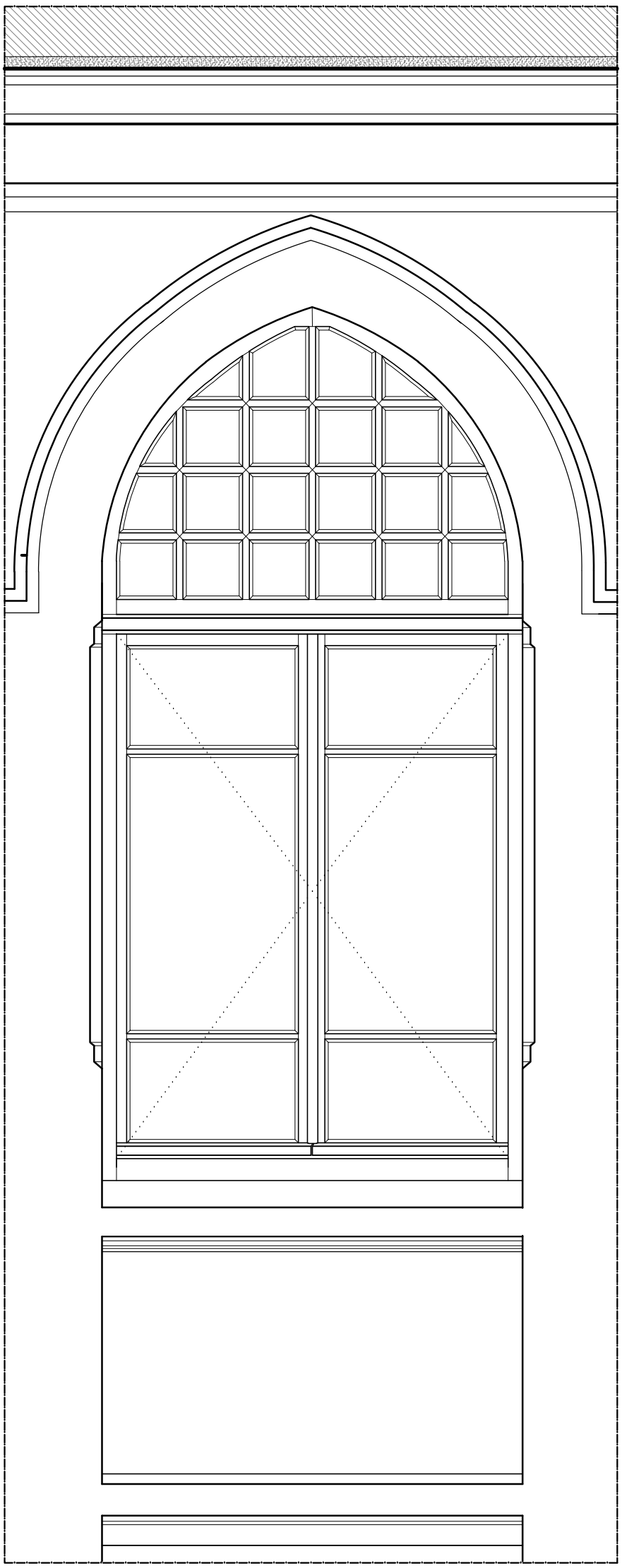

EXTERIOR ELEVATION

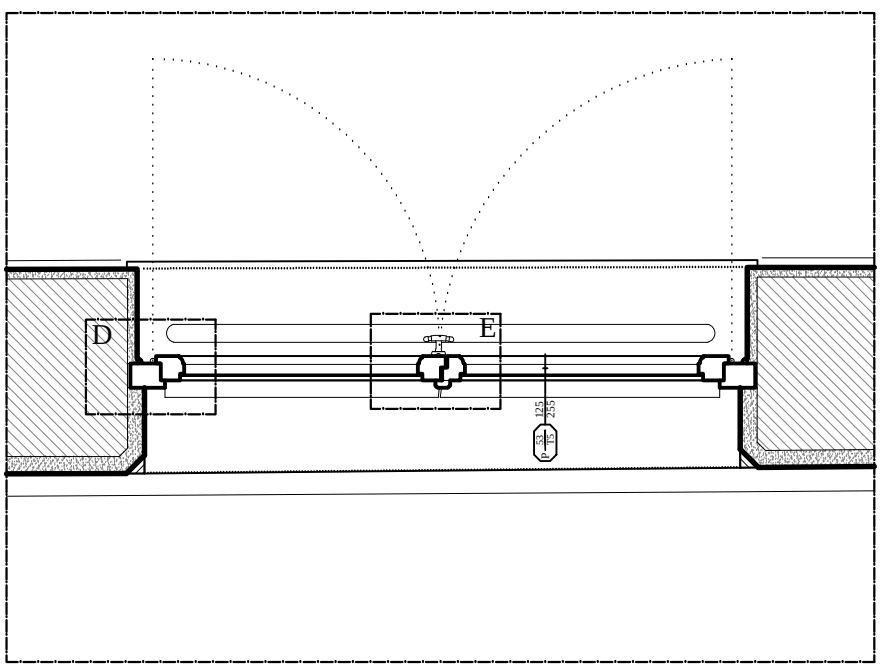

PLAN